VigorSwitch P2280x
L2+ Managed Switch
Quick Start Guide

Version: 1.6

Firmware Version: V2.8.4

(For future update, please visit DrayTek web site)

Date: August 18, 2023

Copyrights

© All rights reserved. This publication contains information that is protected by copyright. No part may be reproduced, transmitted, transcribed, stored in a retrieval system, or translated into any language without written permission from the copyright holders.

Trademarks

The following trademarks are used in this document:

- Microsoft is a registered trademark of Microsoft Corp.
- Windows, Windows 8, 10, 11 and Explorer are trademarks of Microsoft Corp.
- Apple and Mac OS are registered trademarks of Apple Inc.
- Other products may be trademarks or registered trademarks of their respective manufacturers.

Safety Instructions

- Read the installation guide thoroughly before you set up the switch.
- The switch is a complicated electronic unit that may be repaired only be authorized and qualified personnel. Do not try to open or repair the switch yourself.
- Do not place the switch in a damp or humid place, e.g. a bathroom.
- The switch should be used in a sheltered area, within a temperature range of 0 to +45 Celsius.
- Do not expose the switch to direct sunlight or other heat sources. The housing and electronic components may be damaged by direct sunlight or heat sources.
- Do not deploy the cable for LAN connection outdoor to prevent electronic shock hazards.
- Do not power off the device when saving configurations or firmware upgrades. It may damage the data in a flash. Please disconnect the Internet connection on the device before powering it off when a TR-069/ ACS server manages the device.
- Keep the package out of reach of children.
- When you want to dispose of the switch, please follow local regulations on conservation of the environment.

Warranty

We warrant to the original end user (purchaser) that the switch will be free from any defects in workmanship or materials for a period of two (2) years from the date of purchase from the dealer. Please keep your purchase receipt in a safe place as it serves as proof of date of purchase. During the warranty period, and upon proof of purchase, should the product have indications of failure due to faulty workmanship and/or materials, we will, at our discretion, repair or replace the defective products or components, without charge for either parts or labor, to whatever extent we deem necessary tore-store the product to proper operating condition. Any replacement will consist of a new or re-manufactured functionally equivalent product of equal value, and will be offered solely at our discretion. This warranty will not apply if the product is modified, misused, tampered with, damaged by an act of God, or subjected to abnormal working conditions. The warranty does not cover the bundled or licensed software of other vendors. Defects which do not significantly affect the usability of the product will not be covered by the warranty. We reserve the right to revise the manual and online documentation and to make changes from time to time in the contents hereof without obligation to notify any person of such revision or changes.

Regulatory Information

Federal Communication Commission Interference Statement

This equipment has been tested and found to comply with the limits for a Class A digital device, pursuant to Part 15 of the FCC Rules. These limits are designed to provide reasonable protection against harmful interference in a residential installation. This equipment generates, uses and can radiate radio frequency energy and, if not installed and used in accordance with the instructions, may cause harmful interference to radio communications. However, there is no guarantee that interference will not occur in a particular installation. If this equipment does cause harmful interference to radio or television reception, which can be determined by turning the equipment off and on, the user is encouraged to try to correct the interference by one of the following measures:

- Reorient or relocate the receiving antenna.
- Increase the separation between the equipment and receiver.
- Connect the equipment into an outlet on a circuit different from that to which the receiver is connected.
- Consult the dealer or an experienced radio/TV technician for help.



This device complies with Part 15 of the FCC Rules. Operation is subject to the following two conditions:

(1) This device may not cause harmful interference, and

(2) This device may accept any interference received, including interference that may cause undesired operation.

Caution: Any changes or modifications not expressly approved by the party responsible for compliance could void the user's authority to operate the equipment.

More update, please visit www.draytek.com.

EU Declaration of Conformity

We DrayTek Corp. , office at No.26, Fushing Rd, Hukou, Hsinchu Industrial Park, Hsinchu 303, Taiwan, declare under our sole responsibility that the product

- **Product name:** **PoE 24+4 port 10G up-link Switch**
- **Model number:** **VigorSwitch P2280x**
- **Manufacturer:** **DrayTek Corp.**
- **Address:** **No.26, Fushing Rd, Hukou, Hsinchu Industrial Park, Hsinchu 303, Taiwan.**

is in conformity with the relevant Union harmonisation legislation:
EMC Directive 2014/30/EU , Low Voltage Directive 2014/35/EU and RoHS 2011/65/EU with reference to the following standards

Standard	Version / Issue date
EN 55032	2015+AC:2016 class A
EN 61000-3-2	2014 Class A
EN 61000-3-3	2013
EN 55035	2017
EN 62368-1	2014 +A11:2017 (Second Edition)
EN IEC 63000:2018	2018

Calvin Ma

Hsinchu (place) **January 30, 2019** (date) **Calvin Ma / President** (Legal Signature)

Declaration of Conformity

We DrayTek Corp. , office at No.26, Fushing Rd, Hukou, Hsinchu Industrial Park, Hsinchu 303, Taiwan, declare under our sole responsibility that the product

- **Product name:** **PoE 24+4 10G up-link Switch**
- **Model number:** **VigorSwitch P2280x**
- **Manufacturer:** **DrayTek Corp.**
- **Address:** **No.26, Fushing Rd, Hukou, Hsinchu Industrial Park, Hsinchu 303, Taiwan.**

is in conformity with the relevant UK Statutory Instruments:
The Electromagnetic Compatibility Regulations 2016 (SI 2016 No.1091), The Electrical Equipment (Safety) Regulations 2016 (SI 2016 No.1101), and The Restriction of the Use of Certain Hazardous Substances in Electrical and Electronic Equipment Regulations 2012 (SI 2012 No. 3032) with reference to the following standards:

Standard	Version / Issue date
EN 55032	2015+A1:2016 class A
EN 61000-3-2	2014
EN 61000-3-3	2013
EN 55035	2017
EN 62368-1	2014+A11:2017
EN IEC 63000:2018	2018

Calvin Ma

Hsinchu (place) **24th June , 2021** (date) **Calvin Ma / President** (Legal Signature)

1. Package Content



VigorSwitch

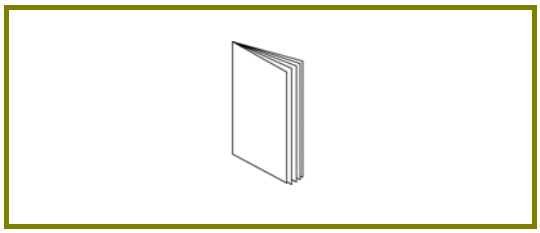

Quick Start Guide

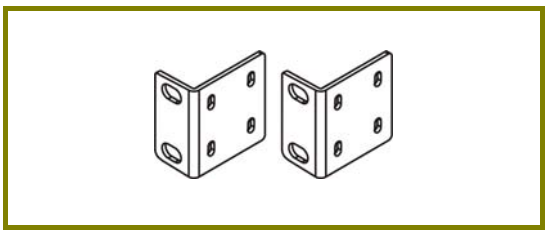

Rack Mount Kit (brackets)

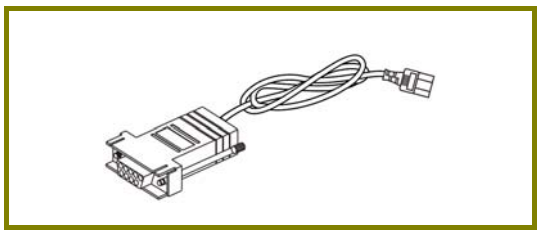

Console Cable

The type of the power cord depends on the country that the switch will be installed.

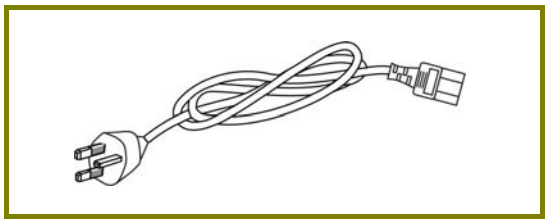

UK-type Power Cord

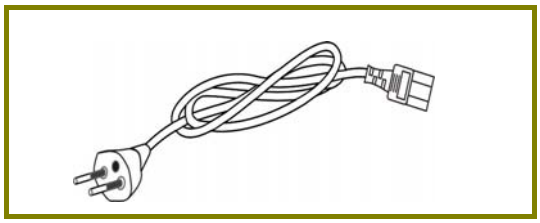

EU-type Power Cord

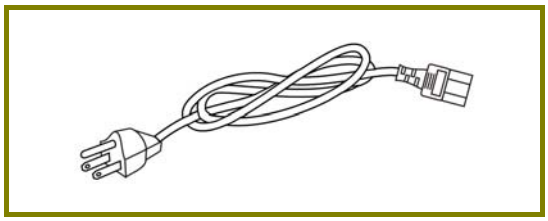

USA/Taiwan-type Power Cord

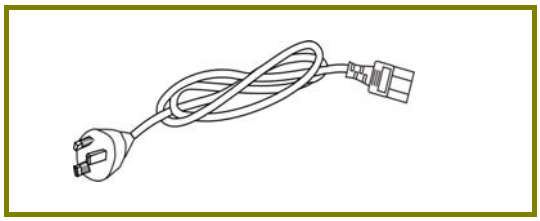

AU/NZ-type Power Cord

If any of these items is found missing or damaged, please contact your local supplier for replacement.

2. Panel Explanation

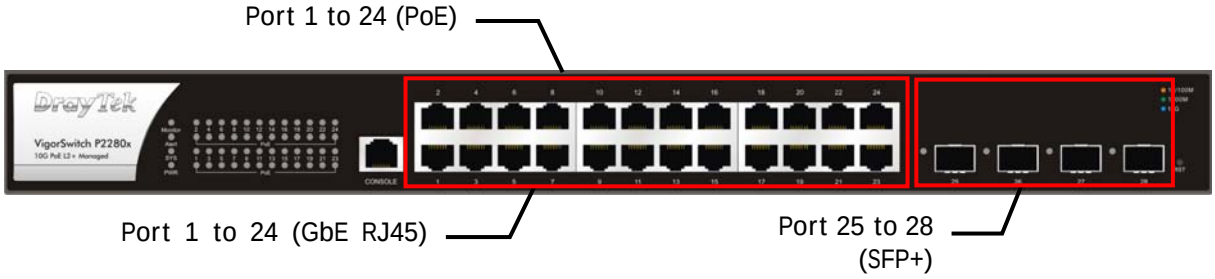

LED	Status	Explanation
Monitor	On (Red)	An alert for system failure due to overheating or wrong voltage.
	Off	The device is in normal condition and running normally.
Alert	Blinking (Green)	The power is over (>) 80% watts PoE power budget.
	Off	The power is under (<) 80% watts PoE power budget.
SYS	On (Green)	The switch finishes system booting and the system is ready.
	Blinking (Green)	The switch is powered on and starts system booting.
	Off	The power is off or the system is not ready / malfunctioning.
PWR	On (Green)	The device is powered on and running normally.
	Off	The device is not ready or is failed.
Port 1 ~ 24 (PoE)	On (Green)	The port is supplied with PoE power.
	Off	No PoE power is supplied on the port.
Port 1 ~ 24 (GbE RJ45)	On (Green)	The device is connected with 1000Mbps.
	On (Amber)	The device is connected with 10/100Mbps.
	Blinking	The system is sending or receiving data through the port.
	Off	The port is disconnected or the link is failed.
Port 25 ~ 28 (SFP+)	On (Blue)	The device is connected with 10Gbps.
	On (Green)	The device is connected with 1000Mbps.
	Blinking	The system is sending or receiving data through the port.
	Off	The port is disconnected or the link is failed.

Interface	Description
Port 1 ~ 24 (GbE RJ45)	Port 1 to Port 24 can be used for Ethernet connection and PoE connection, depending on the device connected.
Port 1 ~ 24 (PoE)	
Port 25 ~ 28 (SFP+)	Port 25 to Port 28 are used for fiber connection.
Console	Used to perform telnet command control.
	Power inlet for AC input (100~240V/AC, 50/60Hz).



Note

The limitation for VigorSwitch P2280x:

Power Output --

- IEEE 802.3af Max. 15.4W Output Supported
- IEEE 802.3at Max. 30W Output Supported

PoE Power Budget –-

- 400 Watts (Max)

3. Hardware Installation

This section will guide you to install the switch through hardware connection and configure the switch's settings through web browser.

Before starting to configure the switch, you have to connect your devices correctly.

Note	Power the device to this switch and get 54V power source through Cat. 5e Cable.

3.1 Network Connection

- Use a Cat. 5e twisted-pair cable to connect a PoE device to the port (1~24) of this switch.
- The switch will supply power to PoE Device over the twisted-pair cable.
- Please note that Power Device must comply with IEEE 802.3af/at.
- Other PCs, servers and network devices can be connected to the switch using a standard 'straight through' twisted pair cable.

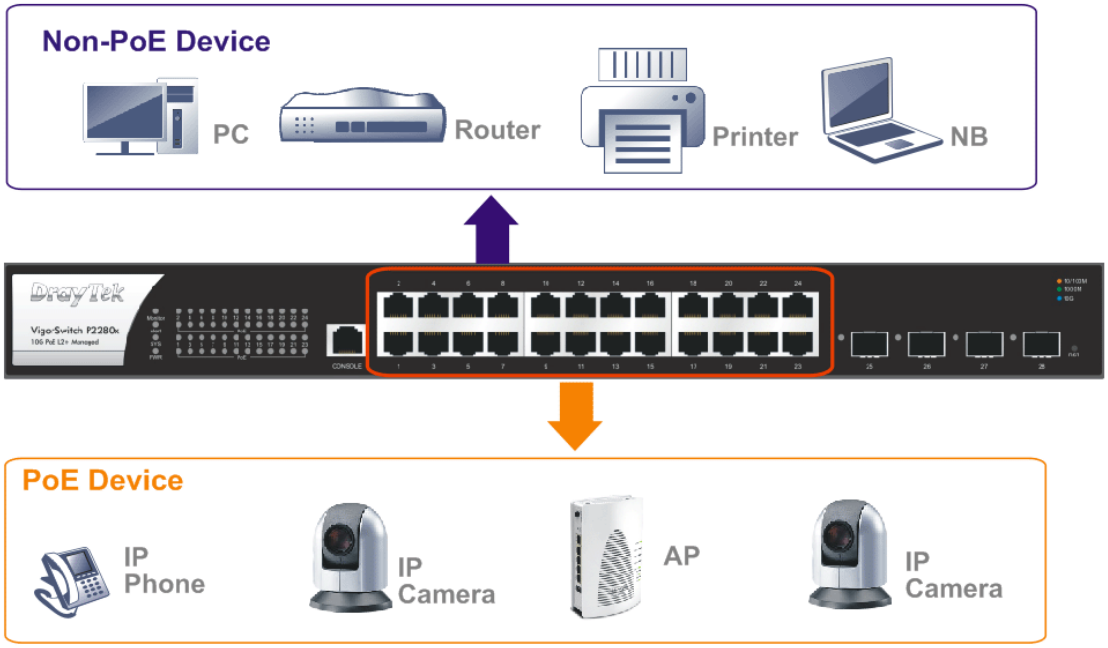

3.2 Rack-Mounted Installation

The switch can be installed easily by using **rack mount kit**.

1. Fasten the rack mount kit on both sides of the VigorSwitch using specific screws.

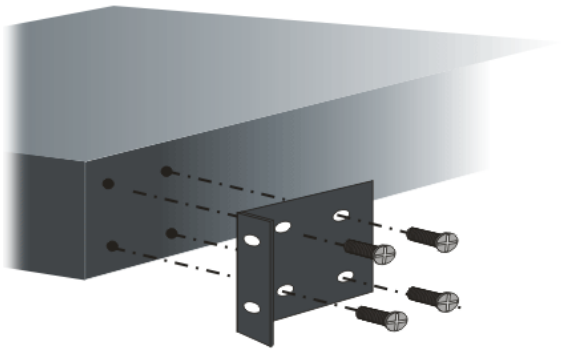

2. Then, install the VigorSwitch (with rack mount kit) on the 19-inch chassis by using other four screws.



4. Software Configuration

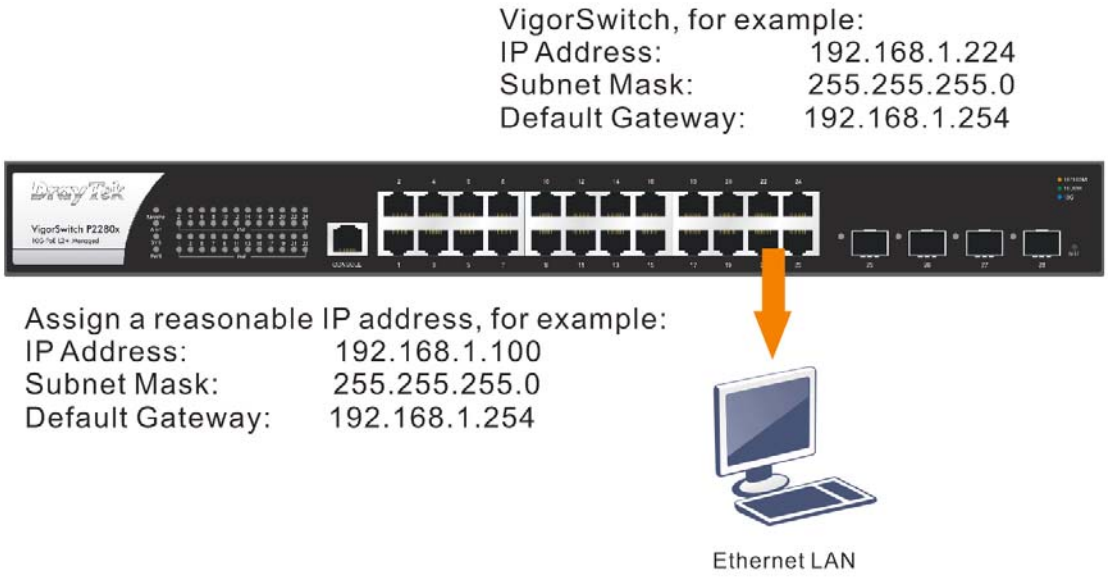

Before using the switch, perform the following steps:

1. Set up a physical path between the configured the switch and a PC by a qualified UTP Cat. 5e cable with RJ-45 connector.

   If a PC directly connects to the switch, you have to setup the same subnet mask for PC and the switch. Default values of the managed switch are listed as follows:

IP Address	192.168.1.224
Subnet Mask	255.255.255.0
DHCP Client	Enabled (On)
Username	admin
Password	admin

2. After configuring correct IP address on your PC, open your web browser and access switch's IP address.

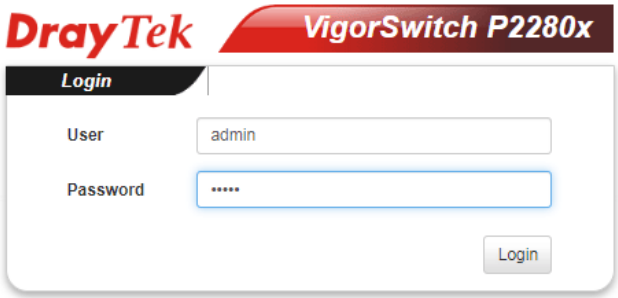

The home page of VigorSwitch will be shown as below:

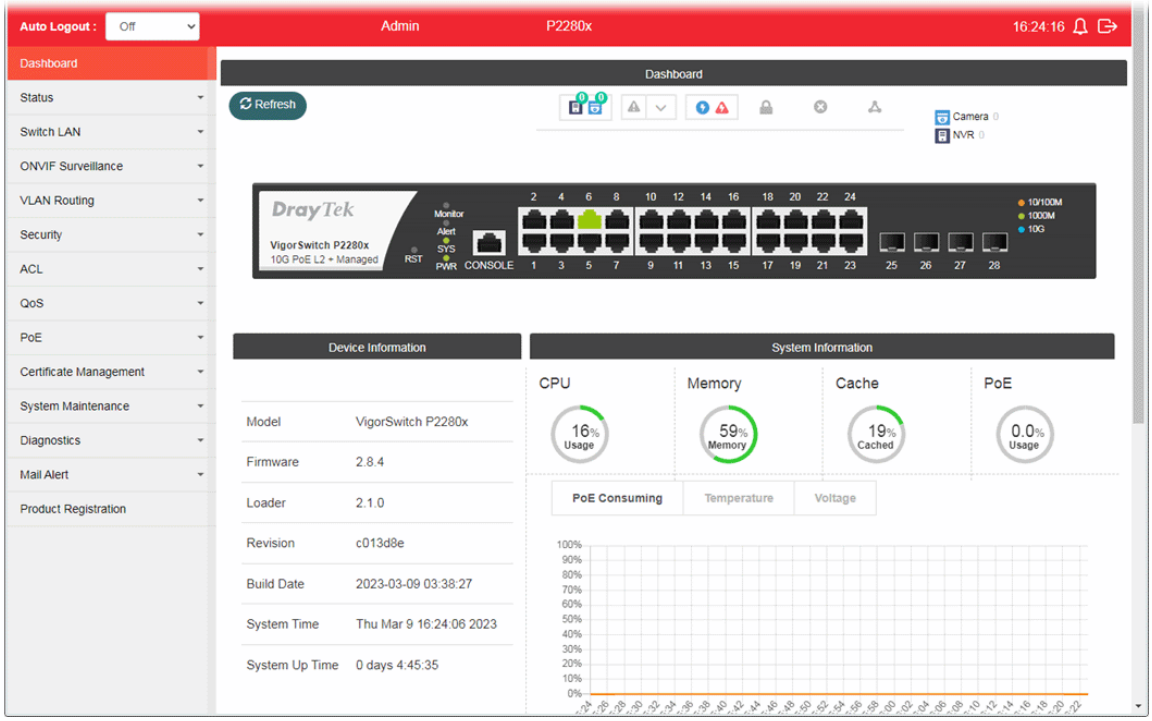

Customer Service

If the switch cannot work correctly after trying many efforts, please contact your dealer for further help right away. For any questions, please feel free to send e-mail to support@draytek.com.

GPL Notice	This DrayTek product uses software partially or completely licensed under the terms of the GNU GENERAL PUBLIC LICENSE. The author of the software does not provide any warranty. A Limited Warranty is offered on DrayTek products. This Limited Warranty does not cover any software applications or programs. To download source codes please visit: http://gplsource.draytek.com GNU GENERAL PUBLIC LICENSE: https://gnu.org/licenses/gpl-2.0 Version 2, June 1991 For any question, please feel free to contact DrayTek technical support at support@draytek.com for further information.

Be a Registered Owner

Web registration is preferred. You can register your Vigor router via https://myvigor.draytek.com.

Firmware & Tools Updates

Due to the continuous evolution of DrayTek technology, all switches will be regularly upgraded. Please consult the DrayTek web site for more information on newest firmware, tools and documents. https://www.draytek.com