VigorAP 912C
802.11ac Ceiling-mount Access Point
Quick Start Guide

Version: 1.7

Firmware Version: V1.4.13

(For future update, please visit DrayTek web site)

Date: September 6, 2024

Intellectual Property Rights (IPR) Information

Copyrights	© All rights reserved. This publication contains information that is protected by copyright. No part may be reproduced, transmitted, transcribed, stored in a retrieval system, or translated into any language without written permission from the copyright holders.
Trademarks	The following trademarks are used in this document: ● Microsoft is a registered trademark of Microsoft Corp. ● Windows, Windows 8, 10, 11 and Explorer are trademarks of Microsoft Corp. ● Apple and Mac OS are registered trademarks of Apple Inc. ● Other products may be trademarks or registered trademarks of their respective manufacturers.

Safety Instructions and Approval

Safety Instructions	● Read the installation guide thoroughly before you set up the device. ● The device is a complicated electronic unit that may be repaired only be authorized and qualified personnel. Do not try to open or repair the device yourself. ● Do not place the device in a damp or humid place, e.g. a bathroom. ● Do not stack the devices. ● The device should be used in a sheltered area, within a temperature range of 0 to +45 Celsius. ● Do not expose the device to direct sunlight or other heat sources. The housing and electronic components may be damaged by direct sunlight or heat sources. ● Do not deploy the cable for LAN connection outdoor to prevent electronic shock hazards. ● Do not power off the device when saving configurations or firmware upgrades. It may damage the data in a flash. Please disconnect the Internet connection on the device before powering it off when a TR-069/ ACS server manages the device. ● Keep the package out of reach of children. ● When you want to dispose of the device, please follow local regulations on conservation of the environment.
Warranty	We warrant to the original end user (purchaser) that the device will be free from any defects in workmanship or materials for a period of two (2) years from the date of purchase from the dealer. Please keep your purchase receipt in a safe place as it serves as proof of date of purchase. During the warranty period, and upon proof of purchase, should the product have indications of failure due to faulty workmanship and/or materials, we will, at our discretion, repair or replace the defective products or components, without charge for either parts or labor, to whatever extent we deem necessary tore-store the product to proper operating condition. Any replacement will consist of a new or re-manufactured functionally equivalent product of equal value, and will be offered solely at our discretion. This warranty will not apply if the product is modified, misused, tampered with, damaged by an act of God, or subjected to abnormal working conditions. The warranty does not cover the bundled or licensed software of other vendors. Defects which do not significantly affect the usability of the product will not be covered by the warranty. We reserve the right to revise the manual and online documentation and to make changes from time to time in the contents hereof without obligation to notify any person of such revision or changes.

Declaration of Conformity

Hereby, DrayTek Corporation declares that the radio equipment type VigorAP 912C is in compliance with Directive 2014/53/EU.

The full text of the EU declaration of conformity is available at the following internet address:
https://fw.draytek.com.tw/VigorAP%20912C/Document/CE/

Manufacturer: DrayTek Corp.
Address: No. 26, Fushing Rd, Hukou, Hsinchu Industrial Park, Hsinchu 303, Taiwan
Product: VigorAP 912C
Frequency Information for Europe area:

2.4GHz WLAN	2400MHz - 2483 MHz, max. TX power: 19.98dBm	*1
5GHz WLAN	5150MHz - 5350 MHz, max. TX power: 22 dBm ; 5470MHz - 5725 MHz, max. TX power: 29 dBm	*2

(*1: for 2.4GHz WLAN model; *2: for 5GHz WLAN model)

This product is designed for 2.4GHz and 5GHz WLAN network throughout the EC region.

Regulatory Information

Federal Communication Commission Interference Statement

This equipment has been tested and found to comply with the limits for a Class B digital device, pursuant to Part 15 of the FCC Rules. These limits are designed to provide reasonable protection against harmful interference in a residential installation. This equipment generates, uses and can radiate radio frequency energy and, if not installed and used in accordance with the instructions, may cause harmful interference to radio communications. However, there is no guarantee that interference will not occur in a particular installation. If this equipment does cause harmful interference to radio or television reception, which can be determined by turning the equipment off and on, the user is encouraged to try to correct the interference by one of the following measures:

- Reorient or relocate the receiving antenna.
- Increase the separation between the equipment and receiver.
- Connect the equipment into an outlet on a circuit different from that to which the receiver is connected.
- Consult the dealer or an experienced radio/TV technician for help.

This device complies with Part 15 of the FCC Rules. Operation is subject to the following two conditions:

(1) This device may not cause harmful interference, and

(2) This device may accept any interference received, including interference that may cause undesired operation.

USA Local Representative	Company name	ABP International Inc.		
	Address	13988 Diplomat Drive Suite 180 Dallas TX 75234		
	ZIP Code	75234	E-mail	henry@abptech.com
	Contact Person	Mr. Henry N Castillo	Tel.	(972)831-1600 140

Caution

Any changes or modifications not expressly approved by the grantee of this device could void the user's authority to operate the equipment.

Any changes or modifications not expressly approved by the party responsible for compliance could void the user's authority to operate this equipment.

This transmitter must not be co-located or operating in conjunction with any other antenna or transmitter.

Radiation Exposure Statement: This equipment complies with FCC radiation exposure limits set forth for an uncontrolled environment. This equipment should be installed and operated with minimum distance 20cm between the radiator & your body.

Operations in the 5.15-5.25GHz band are restricted to indoor usage only.



More update, please visit www.draytek.com.

External Power Supply ErP Information

		1	2	3	4	5
A	Manufacturer	DVE	DVE	AMIGO	AMIGO	TOPOW Electronics Co.
B	Address	No.5, Pao-Kao Road, Hsin-Tien, New Taipei City 231, Taiwan	No.5, Pao-Kao Road, Hsin-Tien, New Taipei City 231, Taiwan	No.20, Qianyang First Road, Yun-Mao-Tsun, San Xing, Zhongshan, Guangdong, China	No.20, Qianyang First Road, Yun-Mao-Tsun, San Xing, Zhongshan, Guangdong, China	No.8 Xinxing Industrial Park, Xinhe Village, Fuyong Street, Baoan District, Shenzhen, Guangdong, China
C	Model identifier	12PF09-12 FUK	18PFR-12 FUK	1201000FB	1202000FV	18120-EU-22086
		12PF09-12 FEU/12PF11-12 FEU	18PFR-12 FEU		1202000FB	18120-UK-23091
D	Input voltage	100~240V	100~240V	100~240V	100~240V	100~240V
E	Input AC frequency	50/60Hz	50/60Hz	50/60Hz	50/60Hz	50/60Hz
	Output voltage DC	12.0V	12.0V	12.0V	12.0V	12.0V
F	Output current	1.0A	1.5A	1.0A	2.0A	1.5A
G	Output power	12.0W	18.0W	12.0W	24.0W	18.0W
H	Average active efficiency	84%	85.5%	86.96%	86.2%	85.21%
I	Efficiency at low load 10%	79.3%	83.7%	77.5%	79.1%	80.1%
J	No-load power consumptio	0.06W	0.07W	0.10W	0.10W	0.1W

* The external power supply used for each product will be model dependent. For more update, please visit www.draytek.com.

Table of Contents

1. Package Content 1

2. Panel Explanation 2

3. Hardware Installation 3

3.1 Ceiling-mount Installation (Wooden Ceiling) 3

3.2 Ceiling-mount Installation (Plasterboard Ceiling) 4

3.3 Suspended Ceiling (Lightweight Steel Frame) Installation 5

3.4 Wall-Mounted Installation 7

4. Connection and Configuration 8

4.1 Notifications for Hardware Connection 8

4.2 Connect to a Vigor Router using AP Management 9

4.3 Web Configurations 10

Connected As a Mesh Node (in Mesh Network) 10
Connected As an Access Point 10

5. Customer Service 14

Be a Registered Owner 14

Firmware & Tools Updates 14

1. Package Content

Take a look at the package content. If there is anything missed or damaged, please contact DrayTek or dealer immediately.

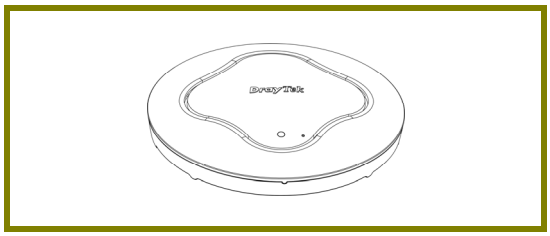

VigorAP 912C Main Unit

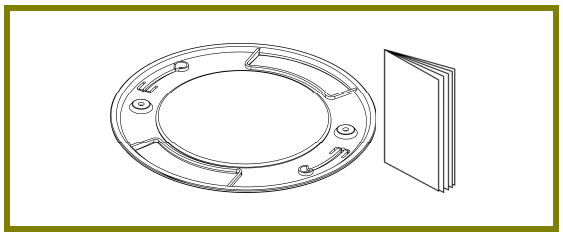

Ceiling mount bracket & Quick Start Guide

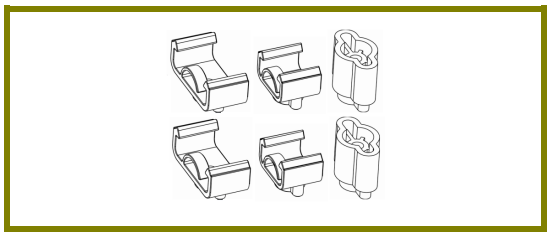

T-Rail Mounting Kits
(Used for suspended ceiling)

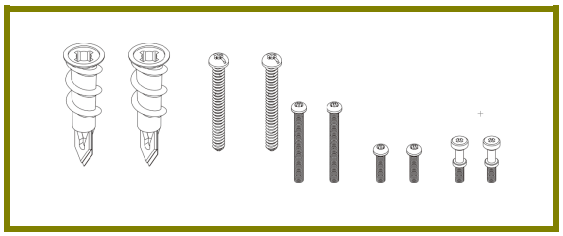

Fixings and Screws
(for ceiling mounting)

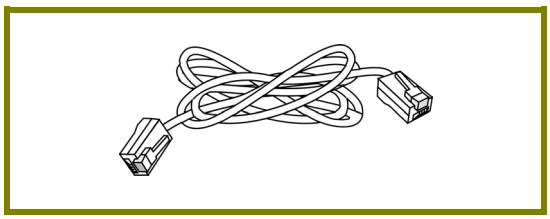

RJ-45 Cable (Ethernet)

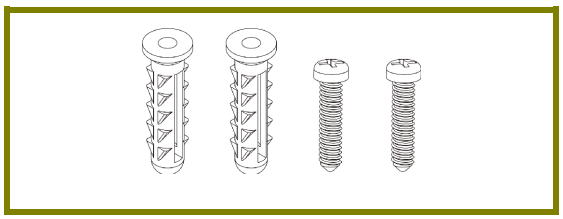

Screw set (for wall mounting)

The type of the power adapter depends on the country that the AP will be installed:

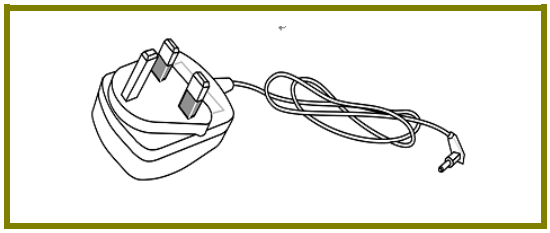

UK-type Power Adapter

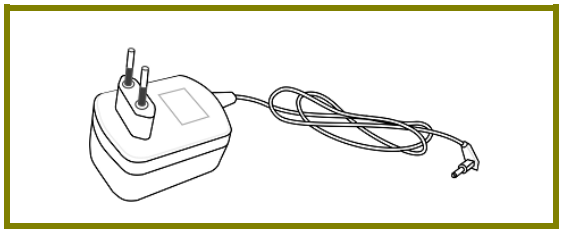

EU-type Power Adapter

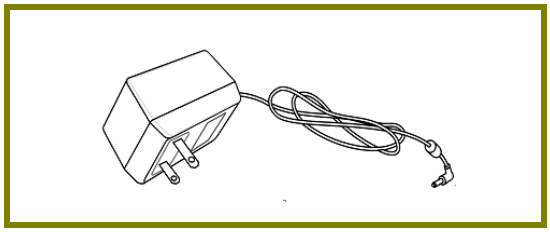

USA/Taiwan-type Power Adapter

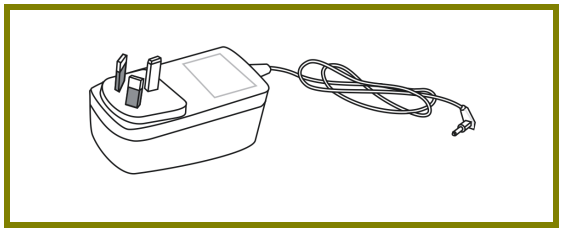

AU/NZ-type Power Adapter

The maximum power consumption is **10** Watt.

2. Panel Explanation

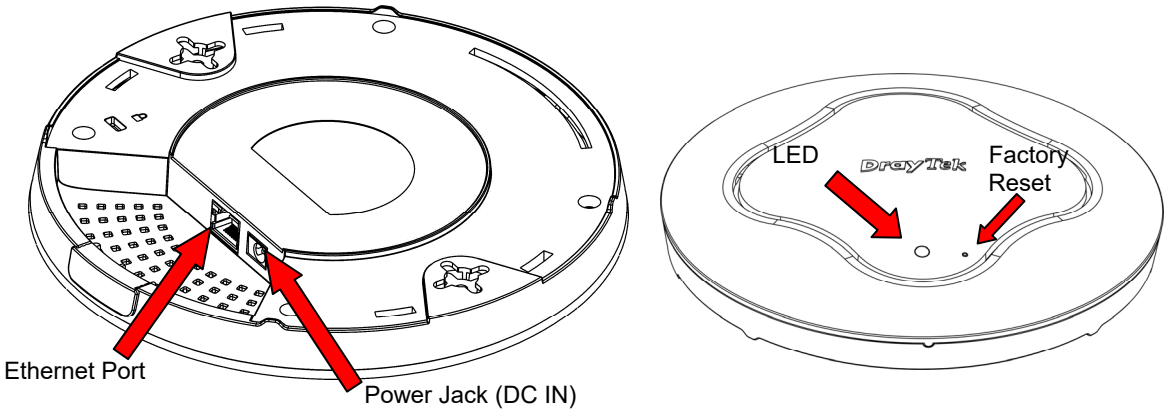

LED	Status	Explanation
Blue LED	On	The system is in boot-loader mode.
	Off	The system is not ready or fails.
	Blinking	The system is in AP mode and work normally.
Green LED	Blinking	The system is in Mesh mode or Range Extender mode and works normally.
Orange LED	Blinking	The system is in TFTP mode.
Off	Off	VigorAP is turned off or not functioning.
Interface		**Explanation**
Ethernet Port		Connects to LAN or router. Supports PoE power & Gigabit (1000BaseT).
Power Jack (DC IN)		Connecter for a power adapter.
Hole		**Explanation**
Factory Reset		Restores the unit back to factory default settings. To use, insert a small item such as an unbent paperclip into the hole. You will feel the button inside depress gently. Hold it for 5 seconds. The VigorAP will restart with the factory default configuration and the LED will blink blue.

Note

- For the sake of security, make the accessory kit away from children.
- Remove the protective film from the access point before use to ensure ventilation.

3. Hardware Installation

VigorAP can be installed under certain locations: wooden ceiling, plasterboard ceilings, light-weighted steel frame and wall.

3.1 Ceiling-mount Installation (Wooden Ceiling)

1. Place the bracket under the wooden ceiling and fasten two screws firmly (as shown in Figure below, Step 1).
2. When the bracket is in place, fasten two screws firmly (as shown in Figure below, Step 2) on the bottom of VigorAP.
3. Make the device just below the bracket. Put the screws installed in Step 2 on the holes of the bracket (as shown in Figure below, Step 3).
4. Gently rotate the device to make screws slide into the notches of the bracket and move forward till it is firmly fixed.

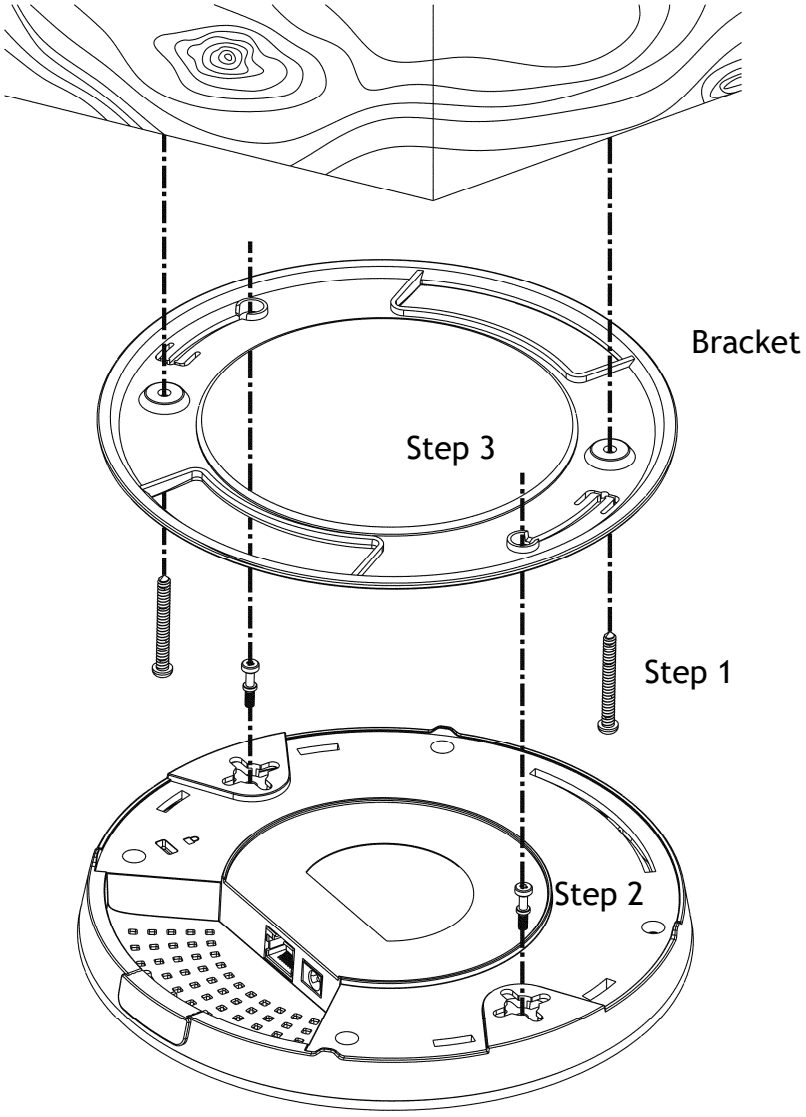

3.2 Ceiling-mount Installation (Plasterboard Ceiling)

1. Place the bracket under the plasterboard ceiling and fasten two turnbuckles firmly (as shown in Figure below, Step 1).
2. Make the screws pass through the bracket and insert into the turnbuckles (as shown in Figure below, Step 2). Fasten them to offer more powerful supporting force.
3. When the bracket is in place, fasten two screws firmly (as shown in Figure below, Step 3) on the bottom of VigorAP.
4. Make the device just below the bracket. Put the screws installed in Step 3 on the screw holes of the bracket (as shown in Figure below, Step 4).
5. Gently rotate the device to make screws slide into the notches of the bracket and move forward till it is firmly fixed.

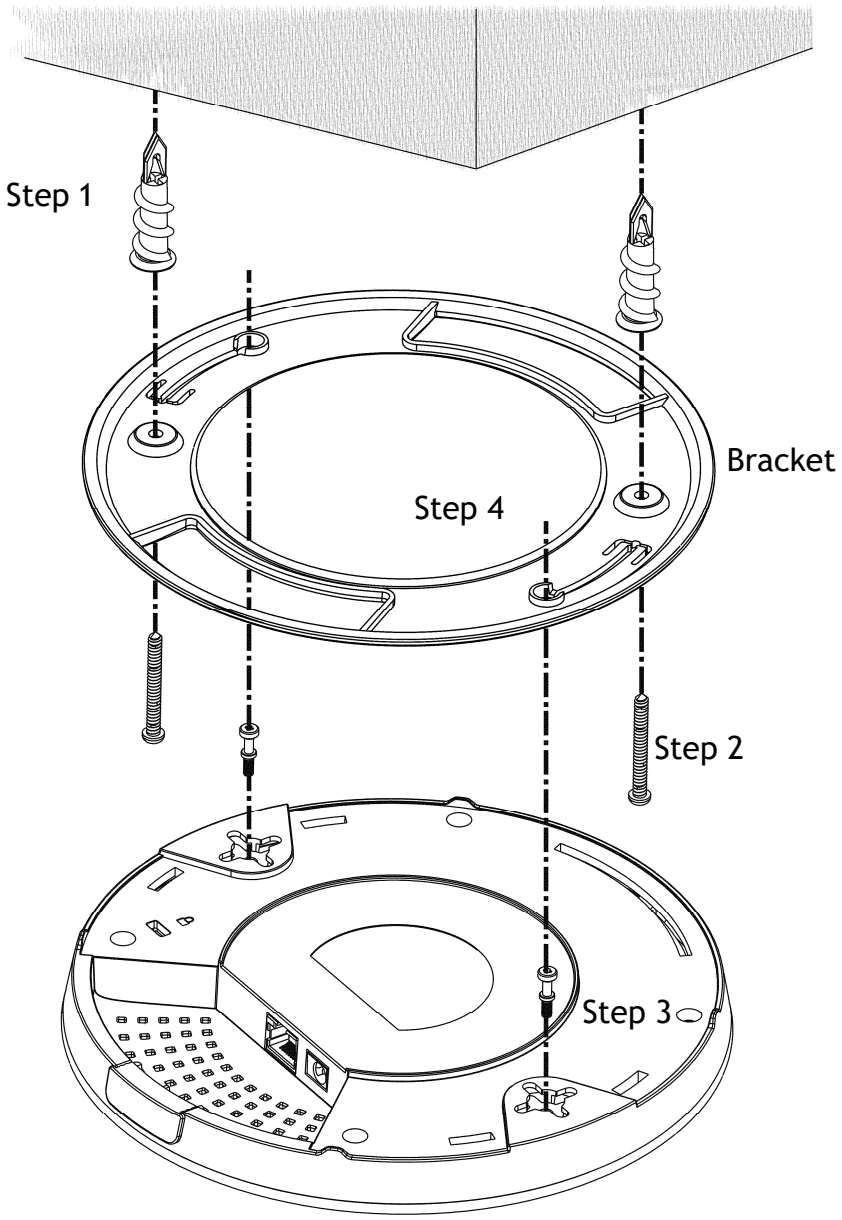

3.3 Suspended Ceiling (Lightweight Steel Frame) Installation

You cannot screw into ceiling tiles as they are weak and not suitable for bearing loads. Your VigorAP is supplied with mounts (T-Rail brackets) which attach directly to the metal grid ('T-Rail') of your suspended ceiling.

1. Choose one set of T-Rail mounting kits from the bundled package.
2. Put the T-Rail brackets on the holes of the bottom side of the device. Fasten them with suitable screws.

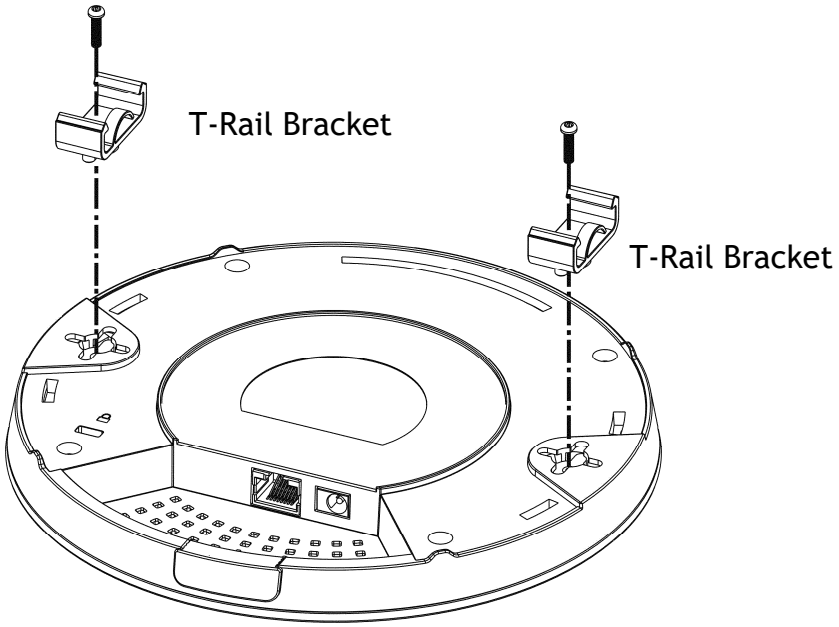

3. If a larger gap is required between the ceiling and the VigorAP, use the extension pieces to extend the height of the brackets.

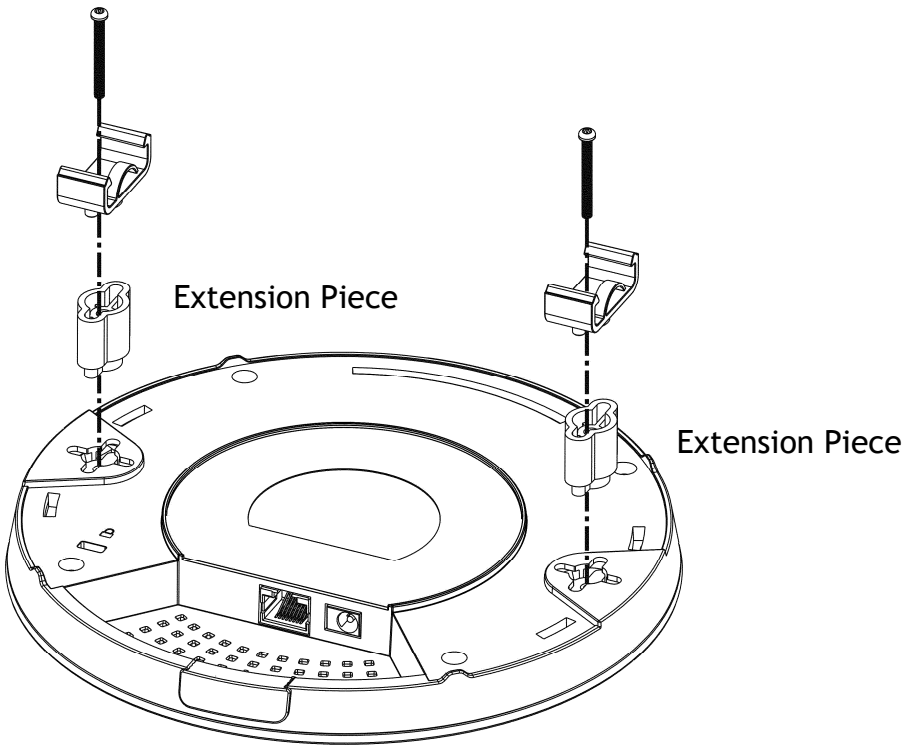

4. Attach the T-Rail brackets to the ceiling frame.

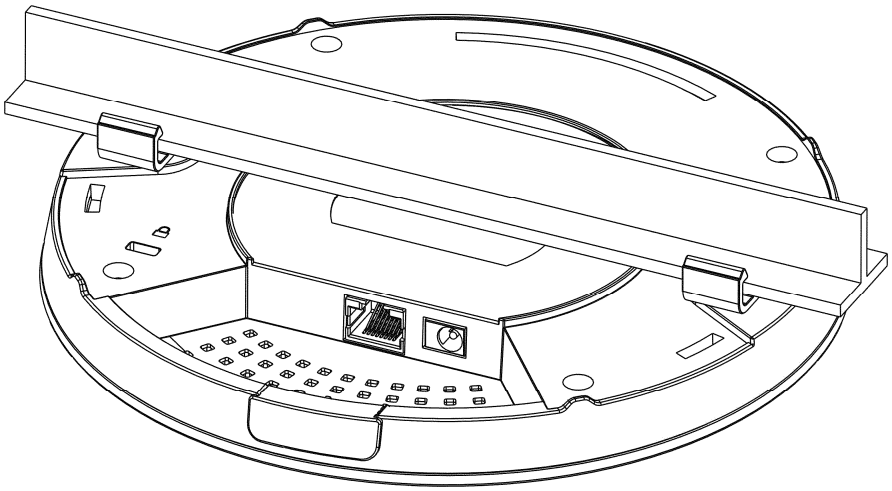

Note

Warning: The screw set shown below is for wall mounting only. Do not use such set for ceiling mounting due to the danger of falling.

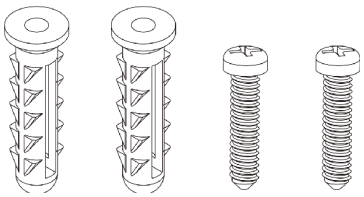

3.4 Wall-Mounted Installation

For wall-mounting, the VigorAP has keyhole type mounting slots on the underside. You can fit the AP at any axis (i.e. 12, 3, 6 or 9 O'Clock) to allow for cable entry from the most convenient location if you are using side entry – note the position of the side entry cable cutout.

1. A template is provided on the VigorAP's packaging box to enable you to space the screws correctly on the wall.



2. Place the template on the wall and drill the holes according to the recommended instruction.
3. Fit screws into the wall using the appropriate type of wall plug (as shown in the ceiling section) but do not use the ceiling bracket – the VigorAP hangs directly onto the screws.

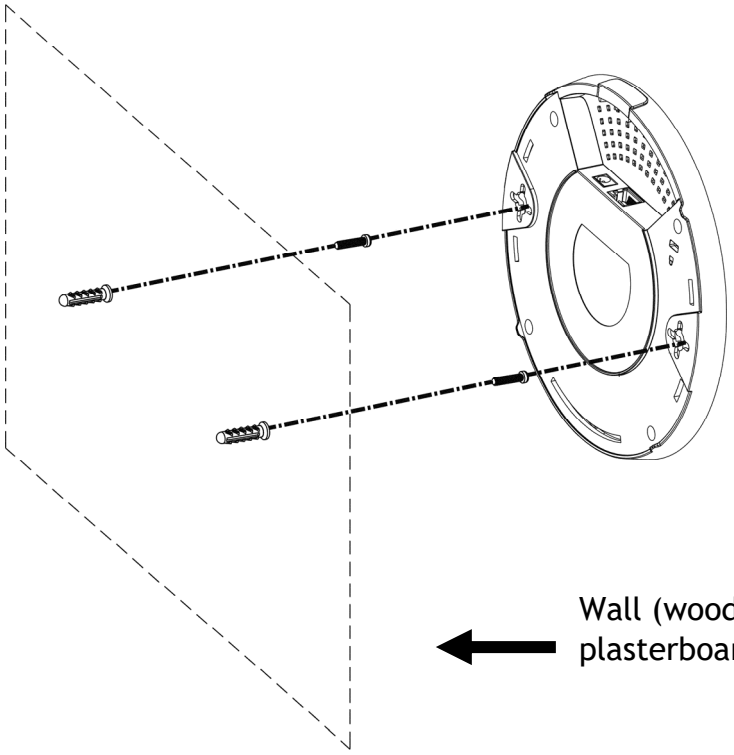

4. Connection and Configuration

4.1 Notifications for Hardware Connection

- If required, remove the protective cap of VigorAP to create extra space for the cables to pass through.

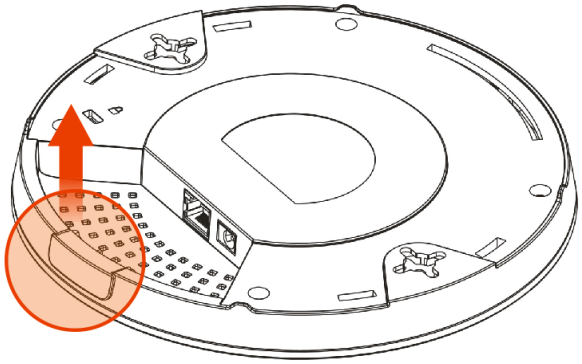

- Connect VigorAP to Vigor router (via LAN port) with Ethernet cable.

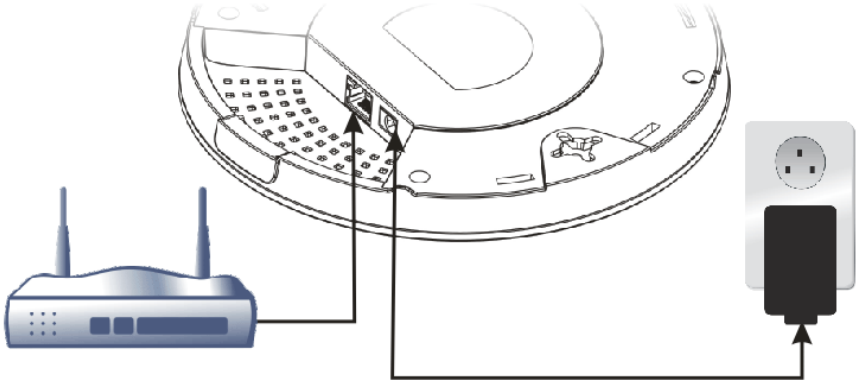

Vigor Router

- Connect VigorAP to PoE switch (via LAN port) with Ethernet cable. For connecting with PoE switch, do not connect the power adapter. VigorAP will get the power from the switch directly.

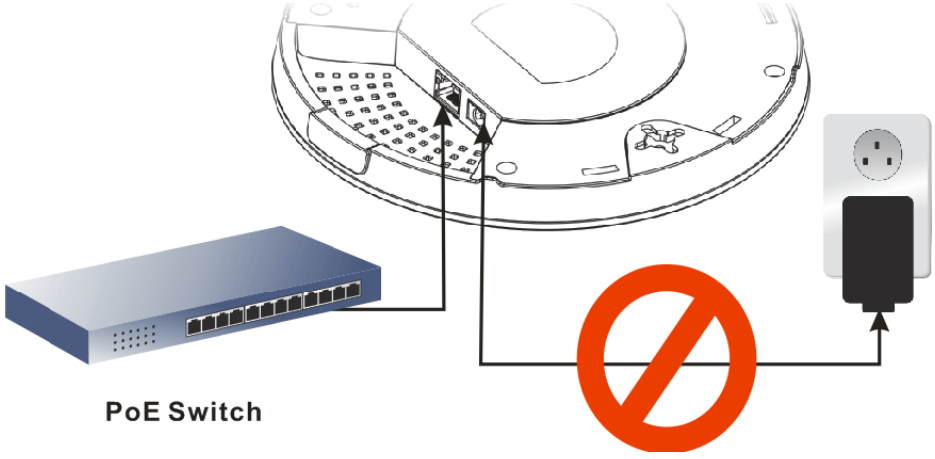

PoE Switch

4.2 Connect to a Vigor Router using AP Management

Your VigorAP can be used with Vigor routers which support AP management (such as the Vigor2865 or Vigor2927 series). AP Management enables you to monitor and manage multiple DrayTek APs from a single interface.

1. Connect one end of the power adapter to power port of VigorAP, and the other side into a wall outlet.

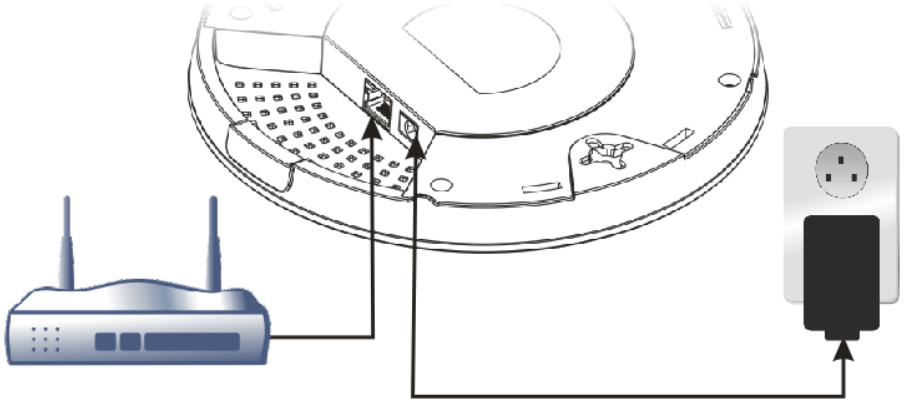

Vigor Router

2. Access into the web user interface of Vigor router. Here we take Vigor2865 as an example. Open **Central Management>>AP>>Status**.

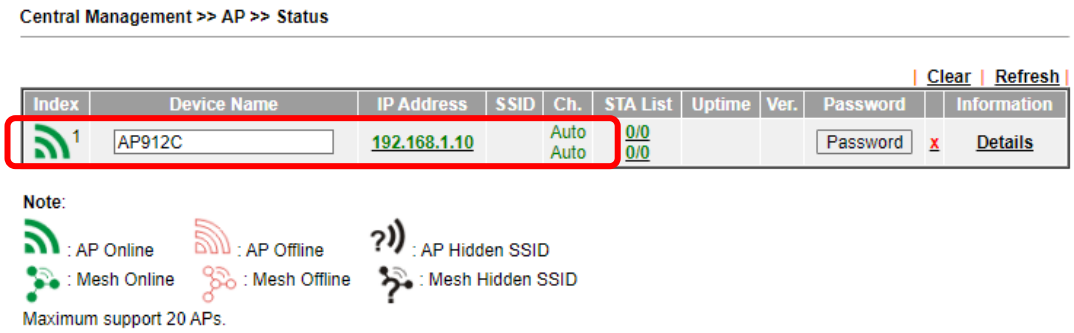

3. Locate VigorAP 912C. Click the IP address assigned by Vigor router to access into web user interface of VigorAP 912C.

4. After typing username and password (admin/admin), the main screen will be displayed.

4.3 Web Configurations

This section will guide you to install the AP and make configuration for VigorAP.

Connected As a Mesh Node (in Mesh Network)



1. Install VigorAP on to the ceiling.

2. As a mesh node, settings related to VigorAP 912C must be configured by a remote Mesh Root (e.g., VigorAP 903) within the mesh network. The user must detect VigorAP 912C via a Mesh Root to add it as a mesh node.

Connected As an Access Point

As an access point, VigorAP 912C must be connected to a router and configured in AP (Access Point) / Range Extender mode.

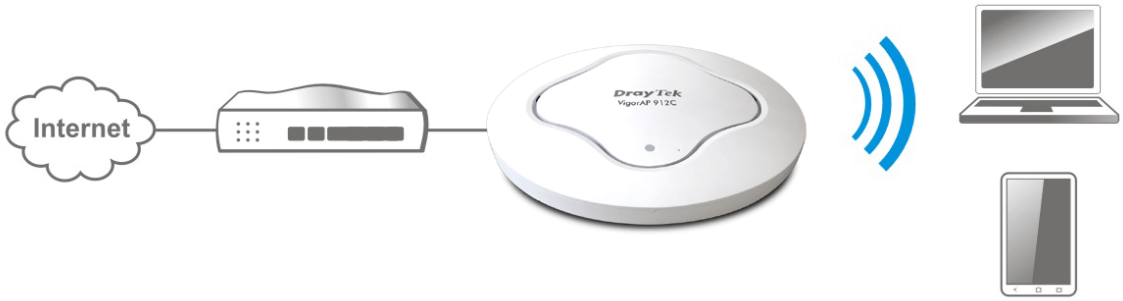

1. Install VigorAP on to the ceiling.

2. Use a twisted-pair cable with RJ-45 plugs at both ends, and plug into Ethernet device (e.g., Vigor router) and Ethernet port of VigorAP.

There are **two methods** to configure VigorAP.

Method 1:

1. Make sure your PC connects to the modem correctly.

2. Open a web browser on your PC and type **http://192.168.1.2.** A pop-up window will open to ask for username and password. Please enter “admin/admin” as the Username/Password and click **Login**.

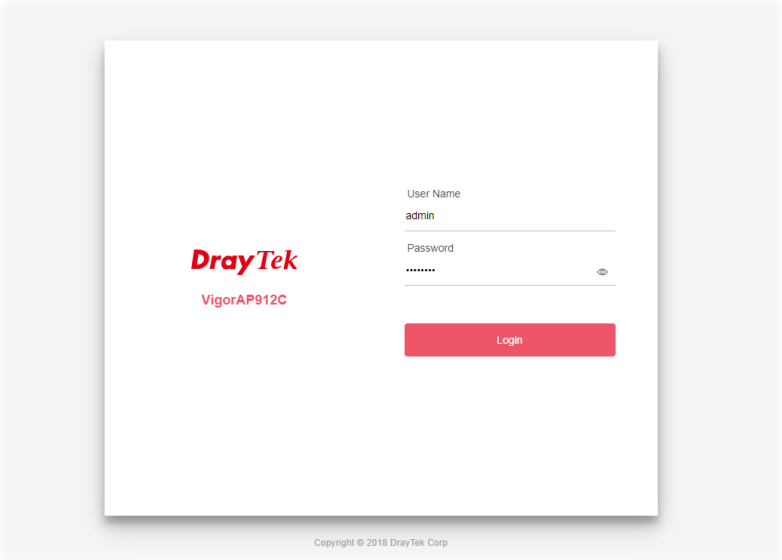

Note

You may either simply set up your computer to get IP dynamically from the router or set up the IP address of the computer to be in the same subnet as **the IP address of VigorAP 912C.**

- If there is no DHCP server on the network, then VigorAP 912C will have an IP address of 192.168.1.2.
- If there is DHCP available on the network, then VigorAP 912C will receive its IP address via the DHCP server.
- If you connect to VigorAP by wireless LAN, you could try to access the web user interface through http://vigorap.com.

3. Next, the page will appear to guide you change the login password. You **MUST** change the login password before accessing the web user interface. Please set a new password for network security.

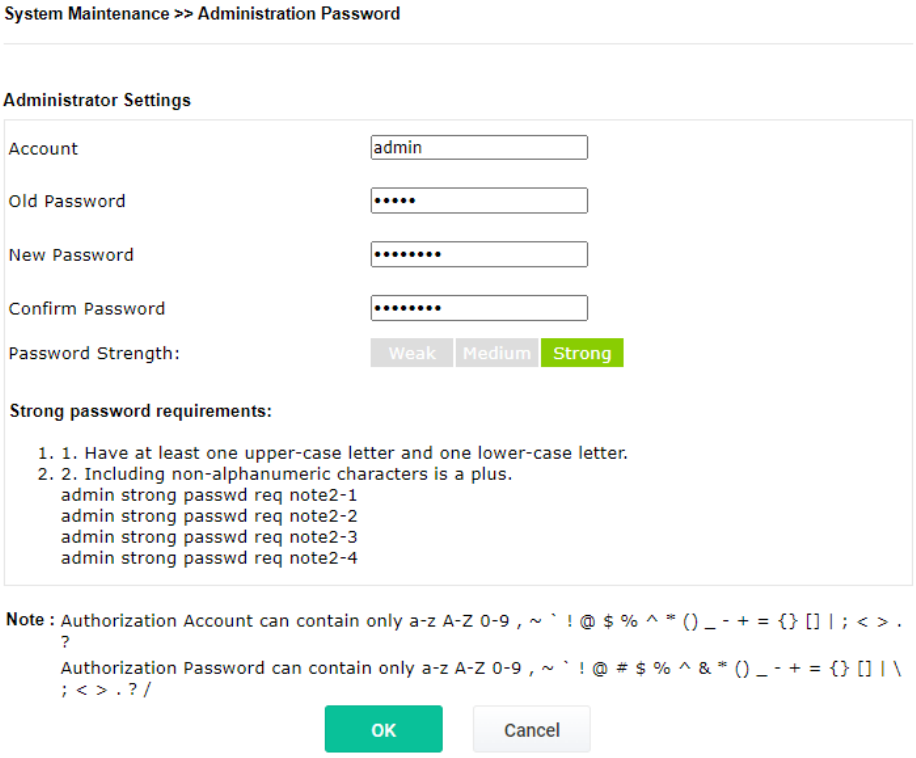

4. After clicking **OK**, the Main Screen will pop up. When the homepage appears, view the configuration and modify the settings if you want.

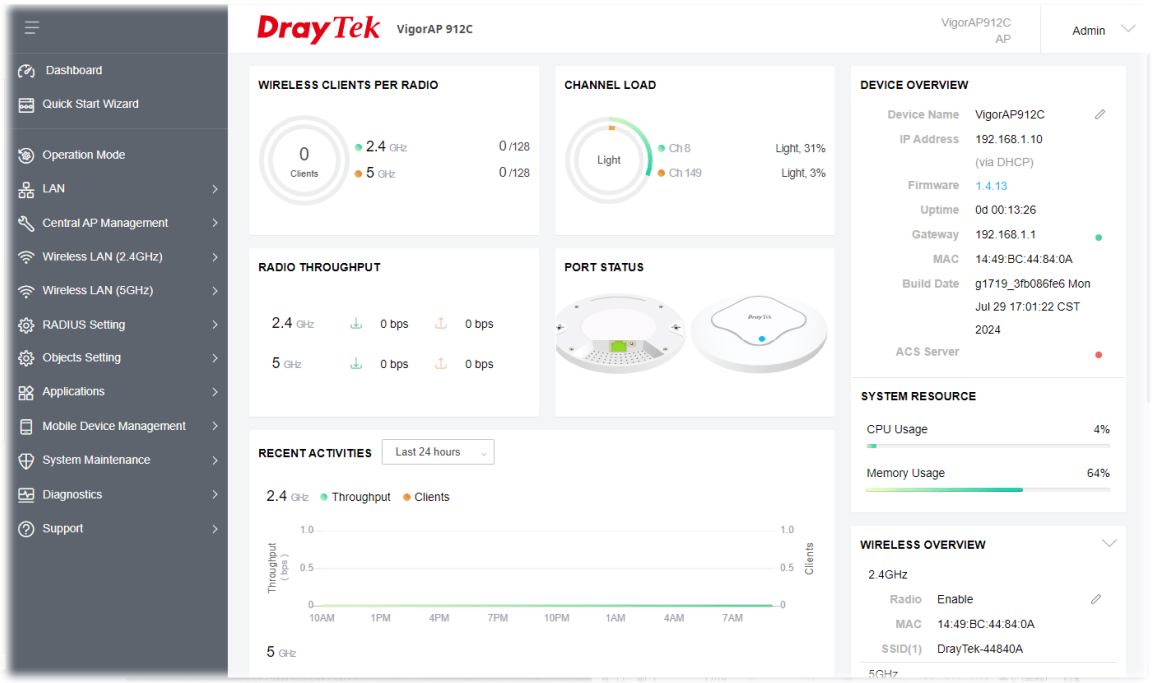

Method 2:

1. Use a mobile phone to scan the QR code named with **DrayTek Wireless App** to download DrayTek Wireless APP.



2. After opening the DrayTek website, use the scroll bar to locate the Wireless APP.



3. Based on the mobile phone type (Android or iOS) you have, select the one you need to download the APP. Then, run the APP.

4. From the home page, click the **Connect** icon to access the **Connect** page. Next, press the QR code icon next to Scan QR Code on your phone screen to open the camera.

   Scan the QR code named with **Connect SSID** to access the web user interface (configuration wizard) of VigorAP 912C. (For iOS users, the SSID and the password will be shown first. Simply click the **Connect** button to access the web user interface of VigorAP.)

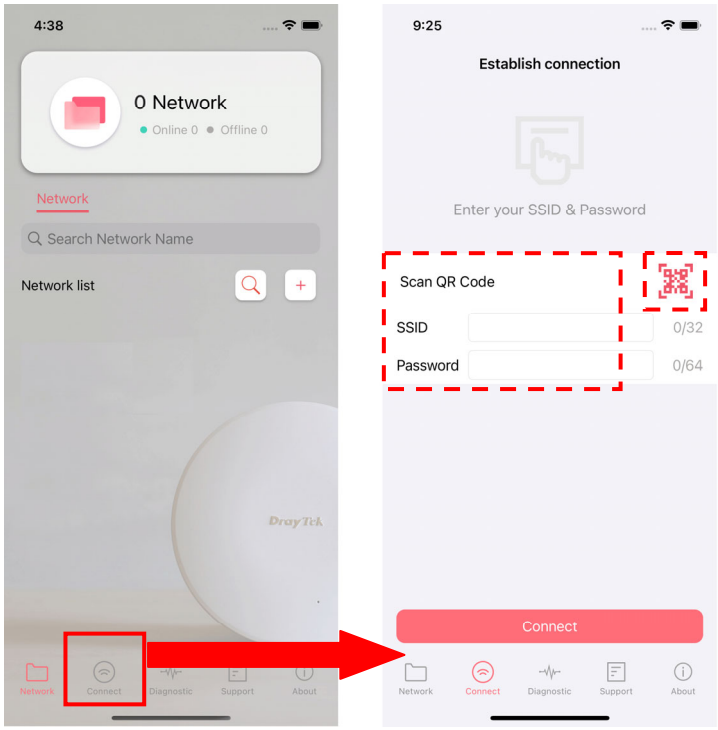

5. Customer Service

If the device cannot work correctly after trying many efforts, please contact your dealer/DrayTek for further help right away. For any questions, please feel free to send e-mail to “support@draytek.com”.

Be a Registered Owner

Web registration is preferred. You can register your Vigor device via https://myvigor.draytek.com.

Firmware & Tools Updates

Due to the continuous evolution of DrayTek technology, all routers will be regularly upgraded. Please consult the DrayTek web site for more information on newest firmware, tools and documents.

https://www.draytek.com

GPL Notice	This DrayTek product uses software partially or completely licensed under the terms of the GNU GENERAL PUBLIC LICENSE. The author of the software does not provide any warranty. A Limited Warranty is offered on DrayTek products. This Limited Warranty does not cover any software applications or programs. To download source codes please visit: http://gplsource.draytek.com GNU GENERAL PUBLIC LICENSE: https://gnu.org/licenses/gpl-2.0 Version 2, June 1991 For any question, please feel free to contact DrayTek technical support at support@draytek.com for further information.